# Estimating CapEx in Optical Multilayer Networks

Claunir Pavan*†, Rui Manuel Morais† and Armando Nolasco Pinto*†
*Departamento de Electrónica, Telecomunicações e Informática, Universidade de Aveiro
†Instituto de Telecomunicações, 3810-193, Aveiro, Portugal
Emails: pavan@ua.pt, rmorais@av.it.pt, anp@ua.pt

***Abstract*—A model for calculating the costs and quantities of required components of a multilayer transport network comprising IP/MPLS-over-SDH/OTN-over-WDM layers is presented. From that a method to estimate the capital expenditures is presented. The method is based on analytical approximations and does not depend on the network topology. Results are presented showing good agreement between the estimations and results obtained from a network dimensioning tool.**

## I. Introduction

The dimensioning of a telecommunication network involves identifying the required resources and their respective quantities. From that, capital expenditures (CapEx) can be calculated. Once the information about the network topology, traffic and costs of constituent components are available, the dimensioning is a quite easy task especially for small networks. There exist network dimensioning tools for this task. However, as the network size and complexity grow, network designers face problems such as the time consumed by the task [1]. Moreover, in the lack of information, such as the network topology, some approximations should be considered to estimate that quantities and costs.

The estimation of CapEx plays an important role - in the dimensioning task - when a preliminary evaluation of alternative solutions is needed. Over the last years some studies have considered the estimation of key variables for the dimensioning problem. In [2], the authors present approximations to quickly estimate the size of a mesh optical network with limited inputs. In [3], the author presents a semi-empirical formulation for calculating a set of variables which no knowledge of the network topology is required. In [4] a method to estimate transponder count in multilayer transport networks is presented.

The growth of Internet based services, such as triple-play which offer data, voice and video on a common platform, has lead network operators look at suitable architectures to efficiently transport this type of traffic [5]. The architecture comprising IP/MPLS-over-SDH/OTN-over-WDM has become a good alternative to cope with this problem [6], [7].

In this paper we present a method for estimating CapEx for IP/MPLS-over-SDH/OTN-over-WDM networks, considering that the network topology is not given. Different approximations for key variables are presented and results are compared with results obtained from a network dimensioning tool. The costs of the network components considered here follow the normalized costs previously published in [5].

The remainder of this paper is organized as follows: in the next section, II, we introduce the IP/MPLS-over-SDH/OTN-over-WDM multilayer network architecture, followed by the model for calculating the quantities of network components and costs and the problem formulation; experiments with the proposed method are performed over a six-node network and results are presented in section III; finally in section IV we conclude the paper.

## II. Network Architecture

To illustrate the method, we consider a network with three layers. The IP layer is responsible for switching the data packets and runs control plane protocols to calculate routes, notifying faults and distribute labels. To deal with these tasks we consider an IP/MPLS router equipped with Gigabit Ethernet (GE) interfaces at the tributary side, and Packet over SONET/SDH (PoS) interfaces at the trunk side.

An electrical layer, the SDH layer, is introduced underneath the IP layer. The basic role of this layer is to switch TDM circuits and for that we assume an SDH/OTN EXC equipped with STM-x gray optical interfaces at both the tributary and trunk sides. These two layers constitute a node, $N$. An optical layer, underneath this electrical layer, is used to transport the signal between different nodes.

The optical layer comprises the WDM transmission systems (i.e., the physical links, $L$). Each transmission system is composed of a pair of WDM Terminal (Mux/Demux) (TM) (one on each side), optical transponders, optical fibers and optical line amplifiers (OLAs). An OLA is required every span and transponders make the interface between WDM Terminals and EXCs. The basic role of this layer is to multiplex and transmit optical signals in optical fibers and also to perform the reverse process. A feasible IP/MPLS-over-SDH/OTN-over-WDM multilayer network architecture is presented in Figure 1.

We assume that all components are fully bidirectional and the network operates in opaque mode. Opaque mode means that optical channels are terminated at every node, where they are switched electronically. The client traffic enters from IP routers and is mapped into SDH virtual containers before be routed through the network. Add and drop traffic have to go through both the IP routers and the EXCs, while transit traffic is kept in the transport domain, i.e., transit traffic is not processed on the IP layer.

This work was partially supported by the Fundação para Ciência e a Tecnologia - FCT, through the grant SFRH/BD/27545/2006, and through the "IP Over WDM Networks" project (POSC/EEA-CPS/59566/2004), FEDER and POSC programs.

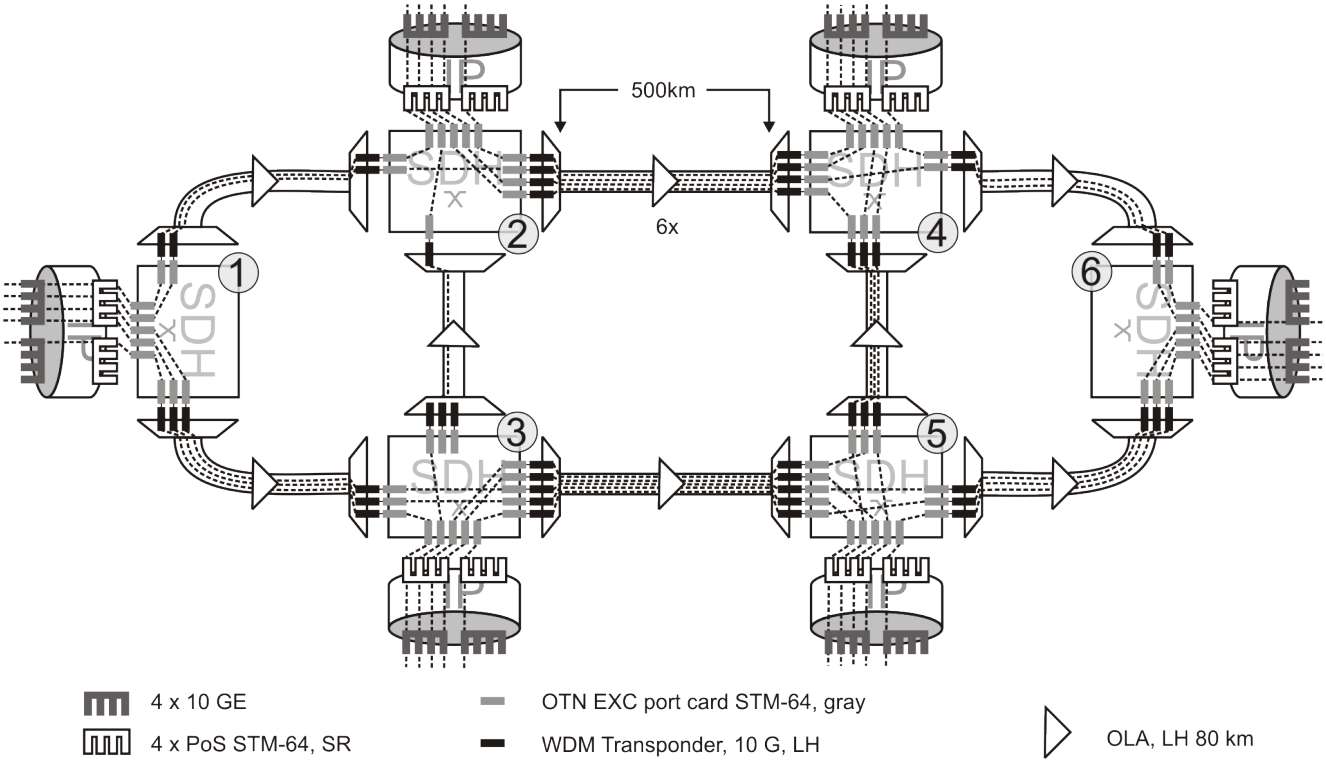


Fig. 1. The multilayer network architecture, opaque implementation, under study. It is supposed that the network is built over an area of $15 \times 10^5$ km$^2$.

### A. Cost Model

We are concerned on the total quantities of network components and costs rather than the amount of components for an individual node or link. In this section we present expressions to calculate the average values of the variables required in the model.

The nodal degree, $\delta_n$, is the number of links that converge to a node and its average number is given by

$$\langle \delta \rangle = \frac{1}{N} \sum_{n=1}^{N} \delta_n = \frac{2L}{N}. \tag{1}$$

The link length, $s_l$, is the distance between two nodes directly connected. Therefore, the average link length is the summation over all link lengths divided by the number of links.

$$\langle s \rangle = \frac{1}{L} \sum_{l=1}^{L} s_l. \tag{2}$$

Because of the link length, sometimes OLAs must be employed to extend the optical reach. We assume an OLA is required every $span$, which is the distance that an optical signal can reach without amplification. The mean number of optical amplifiers, $\langle a \rangle$, required per link is obtained with

$$\langle a \rangle = \frac{1}{L} \sum_{l=1}^{L} \left\lceil \frac{s_l}{span} \right\rceil - 1, \tag{3}$$

where $\lceil s_l/span \rceil$ represents the smallest integer not less than $s_l/span$.

The traffic can be represented as a demand matrix, $[d]$, where each element, $d_{ij}$, is the number of units of transmission capacity. From $[d]$ the total number of bidirectional demands can be calculated with

$$D = \sum_{i=1}^{N-1} \sum_{j=i+1}^{N} d_{ij}. \tag{4}$$

In this work we assume a uniform demand model in which every node requires a demand to every other $N-1$ nodes. Thus, we can rewrite (4) as

$$D = \frac{N(N-1)}{2}. \tag{5}$$

And the average value can be calculated with

$$\langle d \rangle = N - 1. \tag{6}$$

After routing a demand through the network, one or more links are used to the destination being reached. The number of links that a demand traverses to interconnect a pair of nodes is called a path and it depends on the routing strategy. In this work we assume shortest path routing strategy. Each link that a demand traverses is also called a hop and from the network topology we can obtain a hops matrix, $[h]$, where each element, $h_{ij}$, is the number of links that a demand traverses to interconnect a node pair. The average number of hops can be obtained with

$$\langle h \rangle = \frac{2}{N\langle d \rangle} \sum_{i=1}^{N-1} \sum_{j=i+1}^{N} h_{ij}. \tag{7}$$

An optical channel is required for each hop that a demand performs. Adding the number of channels per link we obtain the working capacity, $W^o$, and the average number of channels on links can be obtained with

$$\langle W^o \rangle = \frac{1}{L} \sum_{i=1}^{N-1} \sum_{j=i+1}^{N} h_{i,j} = \frac{\langle d \rangle \langle h \rangle}{\langle \delta \rangle}. \quad (8)$$

For the architecture presented in Figure 1, a demand requires a number of electrical ports at the tributary side, $P_{IPT}$, and at the trunk side, $P_{IPL}$. In this work we do not consider grooming of channels and the bit-rate of both tributary and trunk ports are the equivalent. Therefore, the quantities of required $P_{IPT}$ and $P_{IPL}$ will be also the same. Since IP router cards bring a set of ports, we introduce the variable $p$ to indicate the number of ports available at each card. The average number of cards with $p$ ports, for the IP router, can be calculated as

$$\langle P_{IPT} \rangle = \left\lceil \frac{\langle d \rangle}{p} \right\rceil, \quad (9)$$

and

$$\langle P_{IPL} \rangle = \left\lceil \frac{\langle d \rangle}{p} \right\rceil. \quad (10)$$

Regarding the EXC - because the transit traffic - the number of ports is calculated in a different way. In the nodes where the traffic is added or dropped it is required a tributary and a trunk ports. In the nodes where the traffic should bypass, on the other hand, it is required two trunk ports. Thus, the number of ports required for each node is

$$P_{EXC} = 2 + 2(h_{ij} - 1) + 2 = 2 + 2h_{ij}, \quad (11)$$

and the average number of ports at an EXC can be calculated as

$$\langle P_{EXC} \rangle = \langle d \rangle [1 + \langle h \rangle]. \quad (12)$$

In the transmission system, a pair of transponders is required for each channel. Using (8) we can calculate the average number of optical transponders per link as

$$\langle t \rangle = 2 \langle W^o \rangle. \quad (13)$$

The costs of the network components used in this work rely on a normalized cost model published by [5]. Table I shows the variables and cost for the network components. The costs with optical fiber is not considered since we assume that a sufficient amount of dark fibers is already available.

The network costs can be divided into costs with transmission systems, $C_{TRANS}$, and costs with bandwidth management, $C_{BWM}$. In the architecture considered here, the first represents the WDM terminal systems, transponders and optical line amplifiers. The second one represents the IP routers and its ports and the EXCs and its ports.

The cost with the transmission system is given by

$$C_{TRANS} = L(2\gamma_{t0} + \langle t \rangle \gamma_{t1} + \langle a \rangle \gamma_{t2}). \quad (14)$$

TABLE I
NORMALIZED COST FOR THE NETWORK COMPONENTS.

| Component | Variable | Cost |
|---|---|---|
| IP/MPLS Router Basic (640 Gbits/s, 16 slots) | $\gamma_{i0}$ | 16.67 |
| 4 x 10 GE, LR (1550 nm) | $\gamma_{i1}$ | 4.20 |
| 4 x PoS STM-64, SR (1310 nm) | $\gamma_{i2}$ | 18.33 |
| SDH/OTN EXC Basic (640 Gbits/s, 16 slots) | $\gamma_{e0}$ | 13.33 |
| Gray interface STM-64/ODU2, SR, (1310 nm) | $\gamma_{e1}$ | 0.67 |
| WDM Terminal, LH (40 channels) | $\gamma_{t0}$ | 4.17 |
| WDM Transponder, LH (10 Gbits/s) | $\gamma_{t1}$ | 1.00 |
| Optical Line Amplifier, LH (80 km span) | $\gamma_{t2}$ | 1.92 |

The bandwidth management cost is given by

$$C_{BWM} = N(\gamma_{i0} + \langle P_{IPT} \rangle \gamma_{i1} + \langle P_{IPL} \rangle \gamma_{i2} + \gamma_{e0} + \langle P_{EXC} \rangle \gamma_{e1}), \quad (15)$$

and the total cost, $C_T$, is the summation

$$C_T = C_{TRANS} + C_{BWM}. \quad (16)$$

### B. Problem Formulation

In the case of having information to all the variables presented in section II-A, the results can be easily calculated and they will be exact. If the network designer does not know the network topology, however, two approximations must be made. The first one is the average number of hops, $\langle h \rangle$, which is useful to calculate the number of EXC ports and transponders. The second one is the average link length, $\langle s \rangle$, which is useful to calculate the number of optical line amplifiers.

In order to cope with this problem we can obtain approximated values for the average number of hops with one of the two following expressions, available in [3] and [2], that take the number of nodes and links into account.

$$\langle h \rangle \cong \sqrt{\frac{(N-2)}{(\langle \delta \rangle - 1)}} \quad (17)$$

and

$$\langle h \rangle \cong \frac{Ln\left[(N-1)\frac{\langle \delta \rangle - 2}{\langle \delta \rangle} + 1\right]}{Ln(\langle \delta \rangle - 1)}. \quad (18)$$

The average length of the links, $\langle s \rangle$, can be approximated with use of the geographic area, $A$, where the network is supposed to be built [3]. It can be written as

$$\langle s \rangle \cong \frac{\sqrt{A}}{\sqrt{N} - 1}. \quad (19)$$

In the next section we present the dimensioning of the network scenario presented in Figure 1, using both the exact expressions and the approximations (17), (18) and (19).

## III. EXPERIMENTS AND RESULTS

First of all we set up the six-node network topology, as presented in Figure 1, on the OPNET SP Transport Planner [8] dimensioning tool. The area covered by the network is assumed to be $A = 15 \times 10^5$ km$^2$ and each link has a fiber

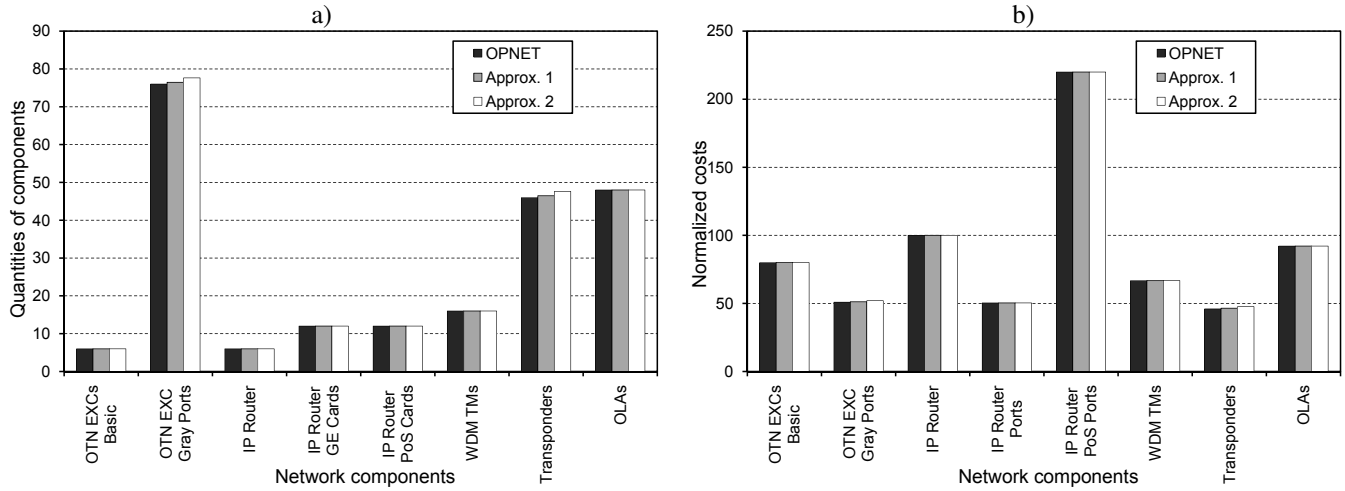


Fig. 2. a) The number of network components obtained from a dimensioning tool (black color bar), using the approximation (17) (gray color bar) and with the approximation (18) (white color bar). b) The capital expenditures (CapEx) distribution for the network in Figure 1 using a dimensioning tool and the approximations.

pair with length of 500 km. We assume an optical amplifier at every span of 80 km. A uniform traffic matrix is given with demands of 10 Gbps and routing is performed following the shortest path in number of hops. Protection is not considered. For the costs of the network components we have used the ones presented in Table I. Thereafter we have obtained the values for the variables presented in section II-A.

Considering that each IP card is composed of four 10 Gbps interfaces, the scenario under study requires 12 ($4 \times 10$ GE) cards plus 12 ($4 \times$ PoS STM-64) cards. Notice that some ports are not used. On the electrical (SDH) layer, 76 (EXC STM-64 gray) port cards are required, being 30 tributary interfaces plus 30 trunk interfaces plus 16 trunk interfaces for transit traffic. On the optical layer, it is required 16 WDM terminals, 46 WDM transponders and 48 optical line amplifiers.

Thereafter we have calculated the variables of section II-A considering the approximations (17) and (18) for the average number of hops, and the approximation (19) for the link length.

The use of the approximations to estimate the average number of hops, $\langle h \rangle$, has influence on the number of EXC port cards and transponders. The $\langle h \rangle$ obtained from the dimensioning tool was 1.53 while using (17) we obtained 1.55 for the scenario under study. This small difference is reflected in the estimation of the number of EXC port cards, which using (17) results in 76.48. The approximation (18) gives $\langle h \rangle = 1.59$, and using it to estimate the number of EXC port cards results in 77.62. For the estimation of the number of transponders, the results have been 46.48 and 47.72 using (17) and (18), respectively. For this simple scenario, which the exact average length of the links is 500 km. The use of (19) gives 499 km, what allow us to obtain the exact number of required optical line amplifiers. Figure 2-a) shows a comparative between the results obtained from the dimensioning tool and from the approximations, in terms of quantities of components. Figure 2-b) shows a comparative considering the capital expenditures. Like can be seen the approximations have good accuracy and so the estimates are valid. We have performed simulations with larger networks and the results are similar.

## IV. Conclusions

We presented a model for calculating the quantities and costs of components in multilayer transport networks. Approximations to estimate the average number of hops and link length, which are useful to estimate the number of EXC ports, transponders and optical line amplifiers, were presented. Experiments were performed over a hypothetic scenario and the values of the key variables were calculated from a dimensioning tool and from approximations. By comparing the results of the experiments, we show that valid estimations can be achieved without the knowledge of the network topology.

## References

[1] S. Korotky, "Analysis and optimization of two-tier networks with application to optical transport backbones," *J. Opt. Netw.*, vol. 4, no. 1, pp. 45–63, 2005.

[2] J. F. Labourdette, E. Bouillet, R. Ramamurthy, and A. A. Akyama, "Fast approximate dimensioning and performance analysis of mesh optical networks," *IEEE/ACM Trans. Netw.*, vol. 3, no. 4, pp. 906–917, Aug. 2005.

[3] S. K. Korotky, "Network global expectation model: A statistical formalism for quickly quantifying network needs and costs," *J. Lightw. Technol.*, vol. 22, no. 3, pp. 703–722, Mar. 2004.

[4] S. Bodamer, J. Spath, and C. Glingener, "An efficient method to estimate transponder count in multi-layer transport networks," *Global Telecommunications Conference, 2004. GLOBECOM'04. IEEE*, vol. 3, pp. 1780 – 1785, Nov. 2004.

[5] R. Huelsermann, M. Gunkel, C. Meusburger, and D. A. Schupke, "Cost modeling and evaluation of capital expenditures in optical multilayer networks," *J. Opt. Netw.*, vol. 7, no. 9, pp. 814–833, 2008.

[6] M. Seery, "Packet transport trends: Ip/mpls success challenged as deployment footprint expands," *Communications Magazine, IEEE*, vol. 46, no. 7, pp. 103 – 107, Jul. 2008.

[7] M. Kohn, "Comparison of sdh/sonet-wdm multi layer networks with static and dynamic optical plane," *Conference on Optical Network Design and Modeling, 2005. ONDM'05. IEEE*, pp. 403 – 412, Fev. 2005.

[8] Opnet sp transport planner (version 14). [Online]. Available: http://www.opnet.com